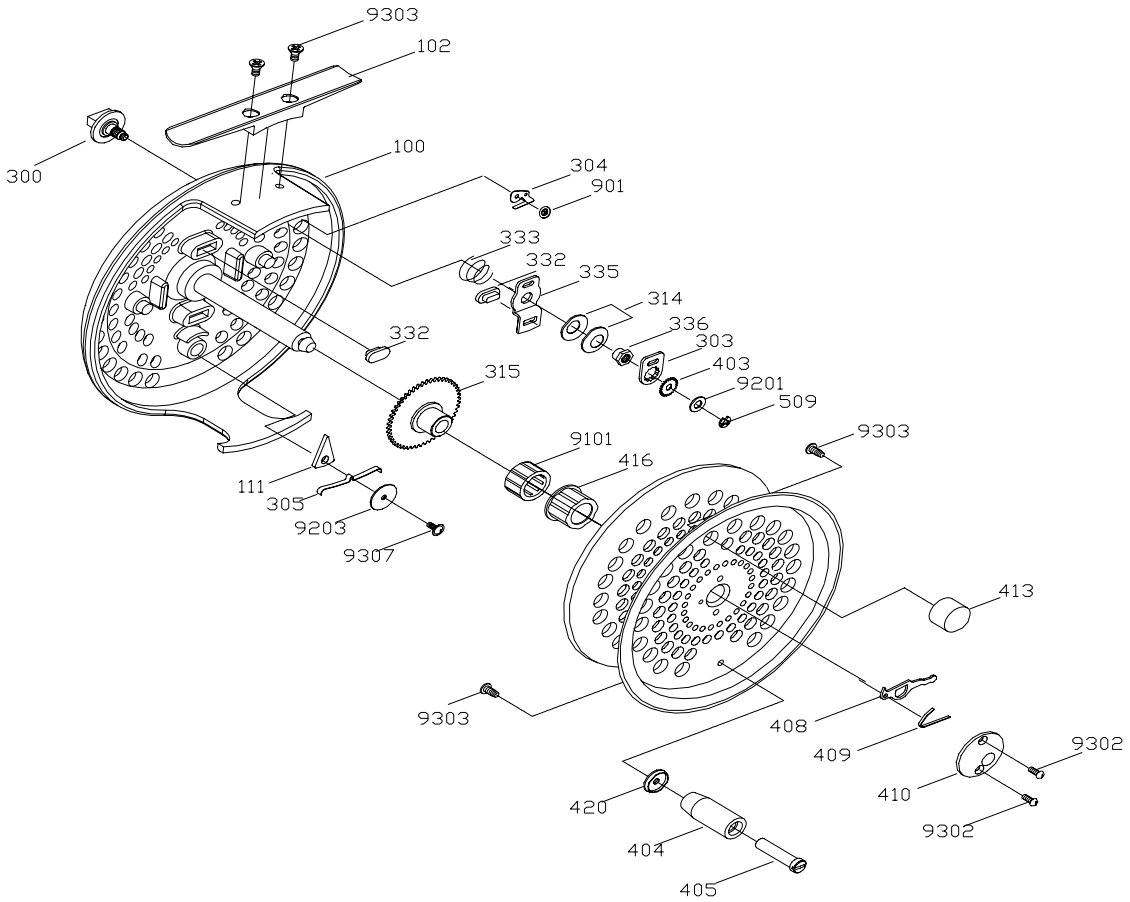

RF - 3/4 Spare Parts

key no	new part no	old part no	parts name	lot no	key no	new part no	old part no	parts name	lot no
100	31000497	13100035-04005A	MAIN BODY		404	34040006	13404006-00	HANDLE KNOB	
101	31010015	13101012-06001	MAIN SHAFT		405	34050008	13405005-03907	HANDLE KNOB SCREW	
102	31020008	13102001-14703	BODY FOOT		408	34080006	13408007-05907	SPOOL RETAINER	
111	31110004	13111005-06	CLICK PAWL		409	34090001	13409001-06	SPOOL RETAINER SPRING	
300	33000019	13300011-010021	DRAG KNOB		410	34100018	1341000601001	SPOOL COVER ASSY.	
300	33000018	13300011-01002	DRAG KNOB	3025	413	34130003	13413002-03905	COUNTER BALANCE	
303	33030006	13303005-06001	FIXED PLATE		416	34160003	13416002-01001	ONE WAY BEARING BUSHING	
304	33040014	13304013-16001	CLICK PAWL		420	34200001	13420001-03907	HANDLE KNOB BUSHING	
304	33040013	13304013-06001	CLICK PAWL	2938	509	35090001	13509001-06	E RETAINER	
305	33050004	13305004-061	CLICK PAWL SPRING		901	29010001	12901001-06	FIXED WASHER	
314	33140001	13314001-05	SPRING WASHER		9101	0910086	01081209-62	ONE WAY BEARING ASSY.	
315	33150002	13315001106	DISK BREAK ASSY.		9203	0920056	022.1x12x0.4-6	WASHER	
332	33320006	13332002-0115	BREAK BLOCK		9203-1	0920077	023.6x7x0.2-6	WASHER	
332-1	33320007	13332003-07	BREAK BLOCK		9302	0930117	03212.0x5.0-61	SCREW	
333	33330002	13333002-06	COMPRESSION SPRING		9303	0930084	032100510	SCREW	
335	33350001	13335001-05907	DRAG CLUTCH PLATE		9303	0930143		SCREW	3022
336	33360002	13336002-03001	DRAG KNOB NUT		9304	0930081	032100507	SCREW	
400	34000114	13400028-04007	SPOOL		9304	0930145		SCREW	3035
400	34000115		SPOOL	3047	9307	0930196	03312x5-61	SCREW	
403	34030005	13403005-06001	CLICK PAWL						